36” x 32”

Product # 63092A

Low Profile | Single Threshold

Product Specifications

- 100% Acrylic with fiberglass & wood reinforcement
- Pre-levelled
- Available in white

Design Features

- Standard 3 ⅜” shower drain opening
- Shower base trimmed to fit 36” x 32” rough opening
- integral 1” tiling flange for easy installation

Shower Base | Low Profile | Single Threshold

Updated : August 14, 2025

Product # 63092A

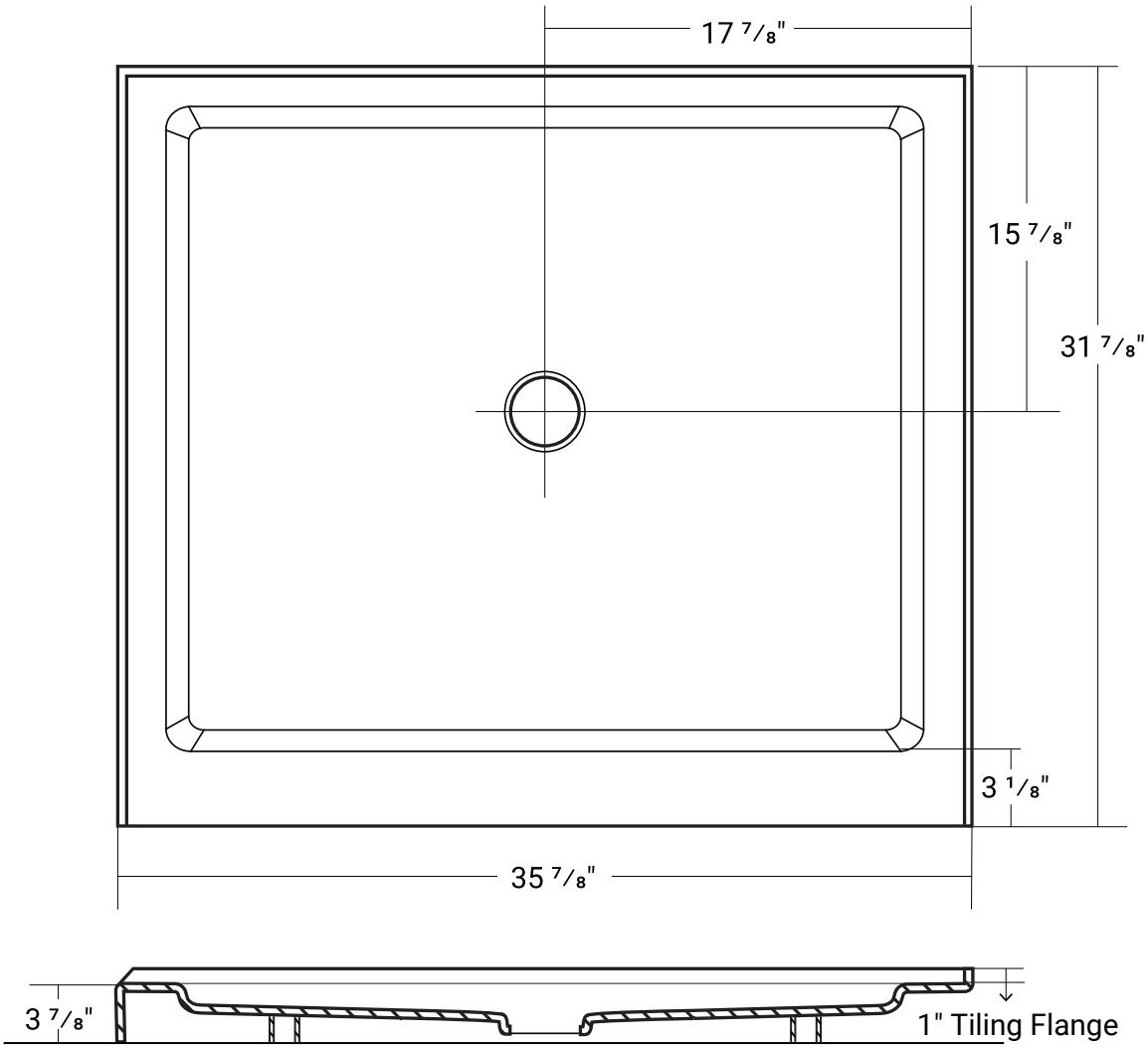

Acritec Industries Corp.

27049 Gloucester Way
Langley, B.C. V4W 3Y3

Tel: 604.607.0856
Fax: 604.607.0857
Email: info@acritec.com
Website: www.acritec.com

In keeping with our policy of continuing product improvement, Acritec Industries Corp. reserves the right to change product specifications without notice.

Important

*While we strive to provide accurate measurements for our customers, sometimes mistakes happen. Our goal is to help things run smoothly from shipment to installation, so if you notice any errors in our spec sheets, please let us know.

Our products are handmade & hand finished so you can expect a tolerance of ± ¼" on all measurements. The water pooling on the Acritec acrylic shower bases of 4 inches is a normal tolerance. This is natural because of the surface tension of the water on plastic surfaces. We strongly recommend waiting until your ordered product is on-site before attempting any rough-in carpentry or plumbing.

If you want to verify any of our measurements, please feel free to call or email us.

*Drawings are not to scale